Full Scale

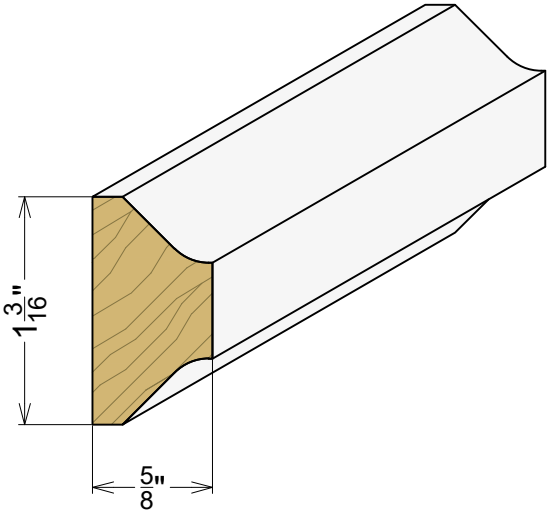

AP 6403

5/8" x 1-3/16"

ALL PHASE
CUSTOM MILL SHOP

7471 Sawyer Circle
Port Charlotte, Florida 33981
(P) 941-698-0531
allphase.rob@gmail.com