Full Scale

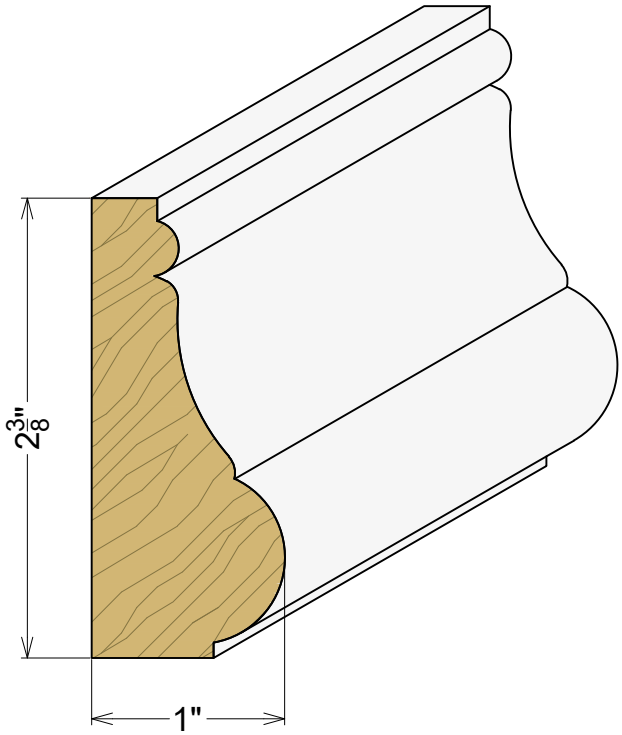

AP 7016

1" x 2-3/8"

ALL PHASE
CUSTOM MILL SHOP

7471 Sawyer Circle
Port Charlotte, Florida 33981
(P) 941-698-0531
allphase.rob@gmail.com