Full Scale

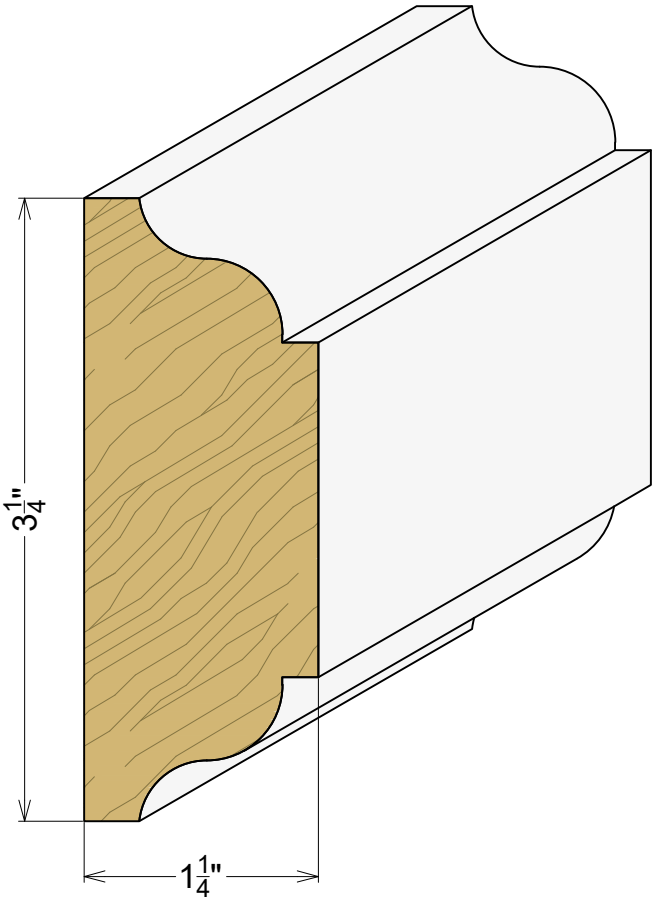

AP 7075

1-1/4" x 3-1/4"

ALL PHASE
CUSTOM MILL SHOP

7471 Sawyer Circle
Port Charlotte, Florida 33981
(P) 941-698-0531
allphase.rob@gmail.com